Lease Crutcher Lewis
3rd and Columbia Demo
801 3rd Ave. Building

Seattle, WA

Structural Calculations

These Calculations cover the design of the CDF and rubble berm support of the existing basement walls of the 801 3rd Ave. building. Demolition of the building is in advance of soldier pile shoring installation around the site. The design and calculations for the adjacent 823 3rd Ave building were recently submitted and approved by Ben Enfield at the SDCI. Design methods for this site are similar to the methods used at the 823 3rd Ave site.

The existing 801 building has two below grade levels. When the building is demolished, the basement walls will be supported by placing approximately 2,000 CY of Controlled Density Fill (CDF) into a berm against the walls and by pushing the concrete demolition debris into a berm against the walls to provide resistance against the forces from the soil. The existing concrete slab-on-grade and elevated slab at the first parking level will be scarified to increase the coefficient of friction between the CDF berm and the existing slabs.

Hart Crowser has provided resistance values for the rubble berm for both sliding and passive failure modes in the geotechnical report including in these calculations. KPFF has performed calculations showing that the rubble berms are adequate to support the basement walls using these values, and has included an additional factor of safety of 1.25 against sliding above what is recommended by Hart Crowser due to the importance of 3rd Ave. The total factor of safety against sliding for the rubble berms is 1.25 x 1.3 (the value recommended by HC) = 1.625.

A total factor of safety against sliding of 1.5 is used for the CDF berms due to the more uniform material used to resist the soil loading.

Once the berms are in place around all four sides of the site, there are no restrictions on the sequencing of the demolition of the building because the soil loads against the basement walls are completely resisted by CDF and rubble berms.

kpff

1601 5th Avenue, Suite 1600
Seattle, WA 98101 206.622.5822

KPFF Project No. 21000279

GREGORY L. VARNEY
STATE OF WASHINGTON
25842
STRUCTURAL ENGINEER
PROFESSIONAL ENGINEER

Greg Varney, S.E.

Digitally signed by Greg Varney, S.E.
Reason: I am approving this document
Contact Info: greg.varney@kpff.com
Date: 2021.05.17 08:37:21-07'00'

5/18/2021

kpff
1601 5th Avenue, Suite 1600
Seattle, WA 98101 [206] 622-5822

project 801 3RD AVE DEMO	by SLN	sheet no.
location	date 5-5-21	
client		job no.

Calculate load on different wall sections around perimeter of 801 building

Soil load on wall is per cantilever wall figure on Figure 4 of the geotech report for "The Nest" as confirmed by Hart Crowser.

Active Pressure = 35 pcf
Surcharge = 50 psf

use addl. factor of safety of 1.25 on load due to importance of 3rd Ave & adjacent streets.

load on 3rd Ave (East Side)

Total load of soil (unit foot length)
= 50 psf · 23 ft + (855 psf − 50) · 23 ft · ½
= 1.15 klf + 9.26 klf
= 10.4 klf
Vertical Pa = 10.4 sin 17° = 3.04 klf

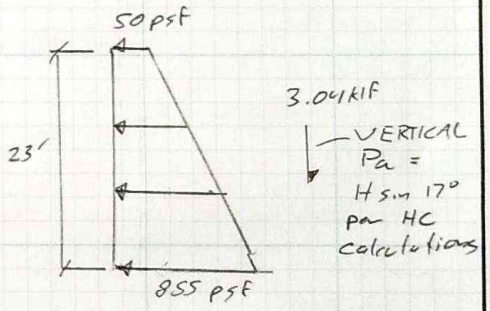

load on 823 Bld side (North side)

Total load of soil for unit width
= 50 psf · 12 ft + (470 psf − 50) · 12 ft · ½
= 0.60 klf + 2.52 klf
= 3.12 klf
Vertical Pa = 3.12 sin 17° = 0.91 klf

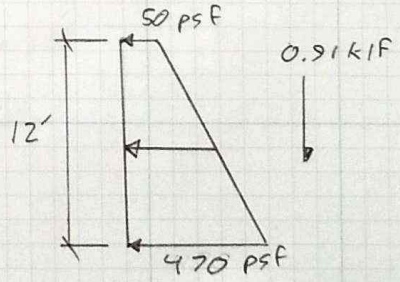

load on alley side (west side)

Total load of soil for unit width
= 50 psf · 10 ft + (400 psf − 50) · 10 ft · ½
= 0.50 klf + 1.75 klf
= 2.25 klf
Vertical Pa = 2.25 sin 17° = 0.66 klf

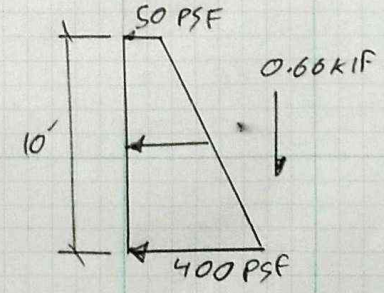

kpff
1601 5th Avenue, Suite 1600
Seattle, WA 98101 [206] 622-5822

project 801 3rd Ave Demo	by SLN	sheet no.
location	date 5-10-21	
client		job no.

Resistance against sliding

Hart Crowser memo dated 1-8-21 recommends a F.S. against sliding of 1.3. Factor of safety used for CDF design will be a larger value of 1.5 due to the importance of the site along 3rd ave. Factor of safety used for Rubble design will be 1.3 · 1.25 = 1.625 which is the same value used in the 823 building, due to the less uniform nature of the rubble.

East wall - CDF supported

Coefficient of friction = 0.3 (CDF on Conc per HC e-mail dated 5-5-21)
CDF density = 107 pcf (per mix designs from stoneway)
CDF will be pumped to fill all voids below P1 to provide full support.

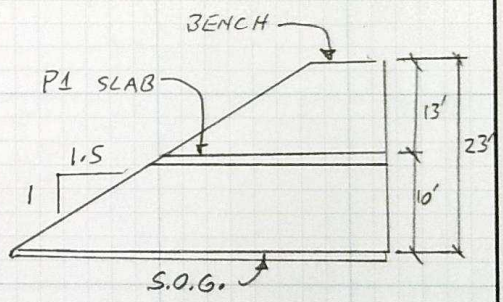

Sliding on S.O.G.

Total load = 10.4 kLF
Try no bench @ slope of 1.5H : 1.0V

Area of CDF = 23ft (23ft · 1.5) ½ = 377 sf
wt. of CDF = 377 ft² · 0.107 kcf = 40.3 k/ft
frictional resistance = (40.3 kLF + 3.0 kLF) · 0.3 = 12.99 kLF
(VERTICAL Pa)
F.S. = 12.99 k/ft / 10.4 kLF = 1.25 n.g.

try a 4' bench @ slope of 1.5H : 1.0V
Area of CDF = 377 sf + 4 · 23 = 469 sf
wt. of CDF = 469 sf · 0.107 kcf = 50.2 k/ft
frictional resistance = (50.2 + 3.0) · 0.3 = 15.96 kLF
F.S. = 15.96 / 10.4 = 1.53 ok

kpff
1601 5th Avenue, Suite 1600
Seattle, WA 98101 [206] 622-5822

project 801 3rd Ave	by SLN	sheet no.
location	date 5-10-21	
client		job no.

East wall - CDF supported

check sliding at intermediate P1 level

$h = 23ft - 10ft = 13\ ft$

Total load on soil on unit width $= 50psf \cdot 13 + 455psf \cdot 13 \cdot 1/2 = 3.61\ kIF$

Vertical $P_a = 3.61 \sin 17° = 1.06\ kIF$

Area of CDF $= 4ft \cdot 13ft + 13' \cdot 13' \cdot 1.5 \cdot 1/2 = 179\ sf$

wt. of CDF $= 179\ sf \cdot 0.107\ kcf = 19.2\ kIF$

Frictional resistance $= (19.2 + 1.06) \cdot 0.3 = 6.08\ kIF$

$F.S. = 6.08 / 3.61 = 1.68$ ok

kpff
1601 5th Avenue, Suite 1600
Seattle, WA 98101 [206] 622-5822

project 801 3rd Ave Demo	by SLN	sheet no.
location	date 5-10-21	
client		job no.

South Wall - CDF Supported

East end of south wall will use the same design as the east wall due to the similar heights.

mid-height of wall 16.5 ft = h

Total load of soil on a unit width = 50psf · 16.5ft + (578psf) · 16.5ft · 1/2 = 5.59 klf

Vertical P_a = 5.59klf · sin 17° = 1.63 klf

area of CDF (w/ 4' bench) = 4 · 16.5 + 16.5 · 16.5 · 1.5 · 1/2 = 270 sf

wt. of CDF = 270sf · 0.107 kcf = 28.9 klf

Frictional resistance = (28.9 klf + 1.63 klf) · 0.3 = 9.16 klf

F.S. = 9.16 klf / 5.59 klf = 1.64 OK

check sliding at intermediate P1 level - at mid-height of wall

h = (16.5ft - 10ft) = 6.5 ft

Total load of soil on wall = 50psf · 6.5ft + 228psf · 6.5ft · 1/2 = 1.07 klf

Area of CDF bench = 4ft · 6.5ft + 6.5ft · 6.5ft · 1.5 · 1/2 = 56 sf

wt. of CDF = 56sf · 0.107 kcf = 5.99 klf

Frictional resistance = (5.99klf + 1.07klf · sin 17°) · 0.3 = 1.89 klf

F.S. = 1.89klf / 1.07klf = 1.77 OK

west end of south wall h = 10'

load = 2.25 klf Vertical P_a = 0.66klf (per previous calcs)

with a 4' bench

Area of CDF = 4' · 10' + 10' · 10' · 1.5 · 1/2 = 115 sf

weight of CDF = 115 sf · 0.107 kcf = 12.3 klf

Frictional resistance = (12.3 + 0.66) · 0.3 = 3.89 klf

F.S. = 3.89 / 2.25 = 1.73 OK

kpff
1601 5th Avenue, Suite 1600
Seattle, WA 98101 (206) 622-5822

project 801 3RD AVE DEMO	by SLN	sheet no.
location	date 5-5-21	
client		job no.

West wall (Rubble supported)

use 6 ft rubble bench

rubble density = 110 pcf per Hart crowser memo dated 1-8-21

area of rubble = 10ft·6ft + 10ft·10ft·1.5·0.5 = 135 sf

wt. of rubble = 135sf · 0.110 kcf = 14.9 klf

sliding resistance = 14.9klf · 0.3 = 4.5 klf

F.S. = 4.5klf / 2.25 = 2.0 (ok)

North wall

at this wall, the soil extends 2' above the top of the slab above because the s.o.g. of the 823 building is higher than the P1 level in the 801 Bldg.

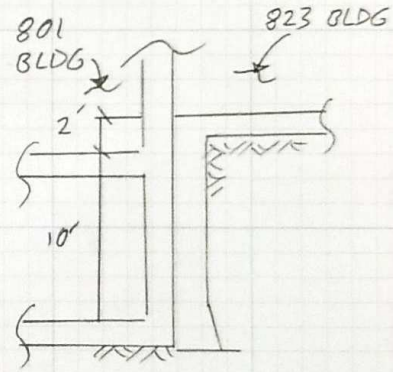

Verify that rubble berm below the P1 slab is adequate to support the soil load from the 823 Building during the construction condition.

Rubble height will be 10 ft per west wall calcs.

Total load on wall = 3.12 klf (per previous calcs)

F.S. = 4.5klf / 3.12 klf = 1.44 $\boxed{\text{n.g.}}$

try 8' berm

area of rubble = 10ft·8ft + 10ft·10ft·1.5·½ = 155 sf

wt of rubble = 155sf·0.11 = 17.05 klf

sliding resistance = 17.05 klf·0.3 = 5.12 klf

F.S = 5.12/3.12 klf = 1.64 (ok)

kpff
1601 5th Avenue, Suite 1600
Seattle, WA 98101 [206] 622-5822

project 801 3rd Ave Demo	by SLN	sheet no.
location	date 5-14-21	
client		job no.

Resistance against sliding - Roughened surface

Hart crowser in an e-mail dated 5-12 recommends a friction value of 0.4 & a minimum slope of 1.5H:1.0V if the CDF is placed on an intentionally roughened surface. Re-evaluate CDF quantities for roughened surface condition.

East wall - CDF supported

CDF held 3'-0" below grade

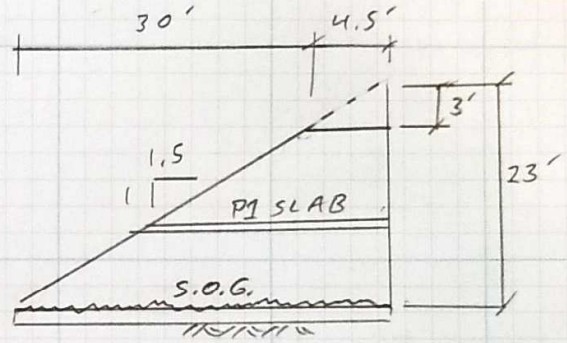

Area of berm = 23'·23'·1.5·1/2 - 3'·3'·1.5·1/2
= 397 - 7 = 390 sf

wt. of CDF = 390 sf·0.107 = 41.7 k/ft

Frictional resistance = (41.7k + 3.0k)·0.4 = 17.9k

F.S. = 17.9k/ft / 10.4 k/ft = 1.72 ok

Check sliding at P1 slab

Area of berm = 13'·13'·1.5·1/2 - 3'·3'·1.5·1/2 = 127sf - 7sf = 120 sf

wt. of CDF = 120sf·0.107 kcf = 12.84 klf

Frictional resistance = (12.84 klf + 1.06klf)·0.4 = 5.56 klf

F.S. = 5.56klf / 3.61klf = 1.54 ok

kpff
1601 5th Avenue, Suite 1600
Seattle, WA 98101 [206] 622-5822

project 801 3rd AVE	by SLN	sheet no.
location	date 5-14-21	
client		job no.

Resistance against sliding - roughened surface

South wall - mid height - no bench h = 16.5 ft

area of CDF = 16.5·16.5·1.5·½ = 204 sf

wt. of CDF = 204 sf · 0.107 kcf = 21.8 klf

Frictional resistance = (21.8 klf + 1.63 klf)·0.4 = 9.37 klf

F.S. = 9.37 klf / 5.59 klf = 1.68 klf (ok)

Sliding at P1 level - no bench

area of CDF = 6.5·6.5·1.5·½ = 31.7 sf

wt. of CDF = 31.7 sf · 0.107 kcf = 3.39 klf

Frictional resistance = (3.39 klf + 0.31 klf)·0.4 = 1.48 klf

F.S. = 1.48 klf / 1.07 klf = 1.38 n.g.

Try w/ 2' bench

area of CDF = 31.7 sf + 2ft·6.5ft = 44.7 sf

wt. of CDF = 44.7 sf · 0.107 kcf = 4.78 klf

Frictional resistance = (4.78 klf + 0.31 klf)·0.4 = 2.04 klf

F.S. = 2.04 klf / 1.07 klf = 1.91 (o.k)

Try w/ 1' bench

Area of CDF = 31.7 sf + 1·6.5ft = 38.2 sf

wt. of CDF = 38.2 sf · 0.107 = 4.09 klf

Frictional resistance = (4.09 klf + 0.31 klf)·0.4 = 1.76 klf

F.S. = 1.76 klf / 1.07 klf = 1.64 (ok)

South wall - west end - no bench

area of CDF berm = 8.5ft · 8.5ft · 1.5 · ½ = 54.2 sf

wt. of CDF berm = 54.2 sf · 0.107 kcf = 5.80 klf

Frictional resistance = (5.80 klf + 0.49)·0.4 = 2.52 klf

F.S. = 2.52 klf / 1.69 klf = 1.49 (ok) close enough

Calc did not consider 1' bench so F.S. will be above 1.5.

kpff
1601 5th Avenue, Suite 1600
Seattle, WA 98101 [206] 622-5822

project 801 3rd Ave	by SLN	sheet no.	
location	date 5-14-21		
client		job no.	

Verify passive resistance of CDF

~~Geotech has not provided passive resistance values for CDF, so use values for rubble wall for comparison~~

Updated Kp value provided by HC specifically for CDF after calculation was performed. SLN - 5/18/21

East wall $h = 20$ ft.

Required F.S. = 2.0 per HC report

$K_p = \cancel{1.3}$ 1.0 – Berm height w/ 1.5H:1.0V slope w/ no bench

passive resistance = $(0.107 \cdot \cancel{1.3}\ 1.0 \cdot 20\text{ft}) \cdot 20\text{ft} \cdot \frac{1}{2} = \cancel{27.82}$ 21.4 k/ft

Factor of safety = $\cancel{27.82}$ 21.4 k/ft / 10.4 kif = $\cancel{2.7}$ 2.05 (ok)

West wall $h = 8.5$ ft

passive resistance = $(0.107 \cdot \cancel{1.3}\ 1.0 \cdot 8.5\text{ft})\ 8.5\text{ft} \cdot \frac{1}{2} = \cancel{5.02}$ 3.87 kif

Factor of safety = $\cancel{5.02}$ 3.87 kif / 1.67 kif = $\cancel{3.0}$ 2.3 (ok)

The passive resistance failure mode is checked in these equations in addition to the sliding resistance failure mode conditions which are checked on the previous pages. Per the Hart Crowser memo which is included later in these calculations, the passive failure mode should have a factor of safety of 2.0 or greater.

Passive resistance is checked at the maximum and minimum berm height conditions and is found to be adequate for both conditions. Because of this and observing the equations, it is clear that the F.S. will be above 2.0 for all intermediate conditions as well, meaning that the berms are adequate for the passive resistance failure modes at all conditions.

SLN-5/18/21